Seat Belt Monitor and Display Systems

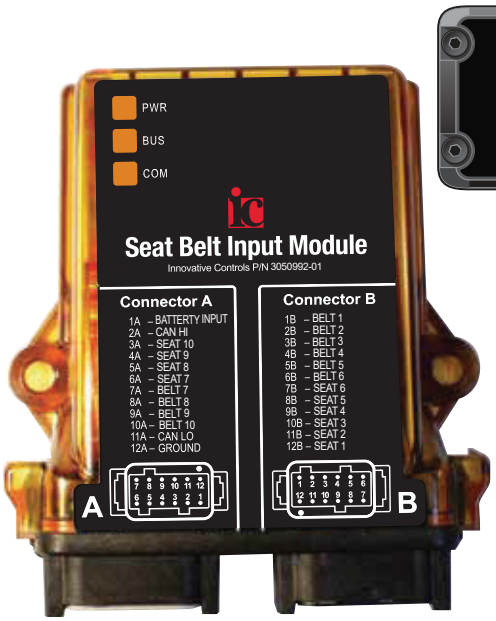



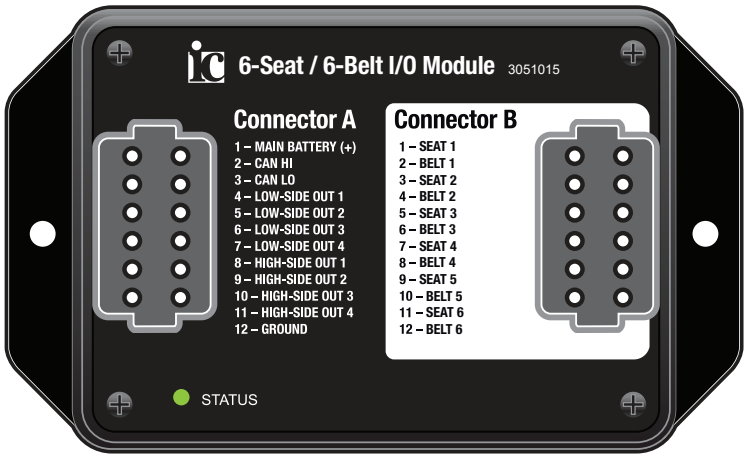

System component part numbers listed to the right. ▶

FEATURES

- Display Status of 2 to 15 Seats
- J1939 CAN Bus Communication at 250K
- Seat Bounce Filter
- Seat Before Belt Sequence Verification
- Sensor Polarity High or Low Configurable
- Sensor State N.O. or N.C. Configurable
- Cab Display Alarm Output Option
- -40C to +105C (-40F to +220F) AEC-Q100 Level 2 Operating Temperature
- Input Module Ingress Protection Rating IP67
- Cab Display with Manual or Automatic Brightness Control

The Innovative Controls Inc. Seat Belt Monitor System is a series of Seat Belt Display modules that are used to show the driver when seats are occupied and restraints are properly secured. The display modules communicate with the Seat Belt Input Module using J1939 CAN bus. The low profile cab displays are available in several different configurations to match the seating layout of your vehicle. Innovative Controls Inc can supply custom layouts with logos that differentiate your vehicle cab from the competition.

The input module can sense the occupancy and restraint sensors status for 10 seats. The system can accommodate multiple seat belt input modules for applications with more than 10 seats. The input module verifies that the seat occupancy and restraint sequence takes place in the correct order to ensure the safety of the occupants. A seat bounce filter eliminates annoying false alarms caused by fidgety passengers or bumpy roads.

The display modules have an optional high side output that can be used to sound an alarm when the parking brake is released with an unsecured passenger on board. The Seat Belt Monitor System J1939 CAN bus messaging is compatible with vehicle data recorder system to ensure fire apparatus compliance to NFPA-1901 and ambulance compliance to NFPA-1917. Innovative Controls Seat Belt Monitor System allows fire apparatus and ambulance builders to offer customized vehicle safety system while reducing design, labor, and installation time.

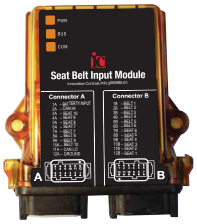

Seat Belt Input Module
3050992-01



VDR Module (optional)
3051145

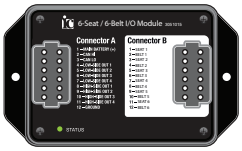

6-Seat / 6-Belt I/O Module
3051015



Seat Belt Display
3050493-XX

3050992-01 Seat Belt Input Module

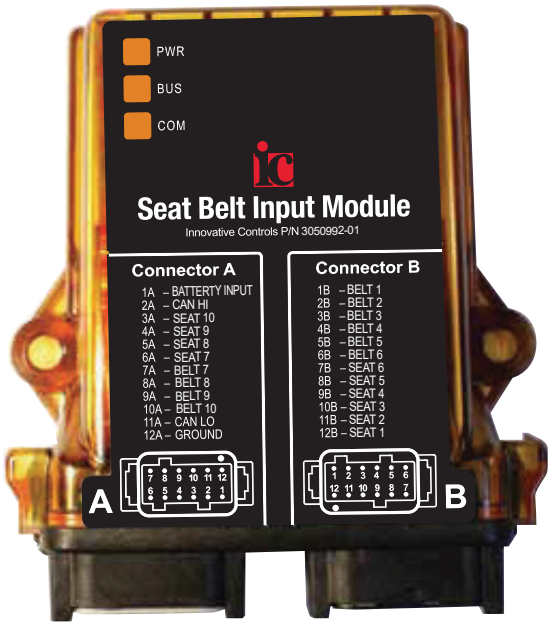

- The Innovative Controls Seat Belt Input Module has 20 low side inputs.
- The module input states are transmitted on the CAN network where it can be used to drive information displays, interlocks, and alarms.
- 3 status LEDs provide at-a-glance feedback on the state of the CAN network, diagnostics, and fault conditions.

FEATURES

- **20 selectable high side or low side inputs**
- **CAN bus interface with J1939 protocol**
- **LED status indicators**

DIMENSIONS

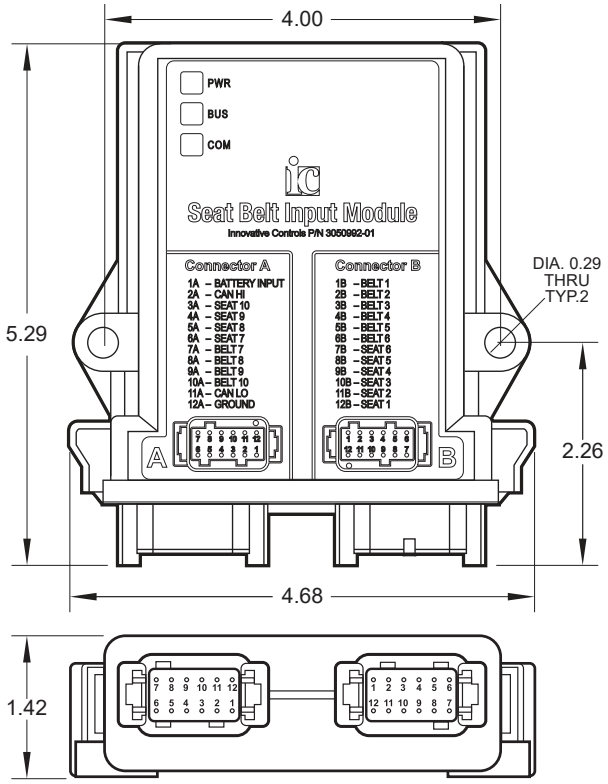

HS/LS CONNECTORS

J1A INPUTS 1-8 CAN

PIN	DESCRIPTION
1A	BATTERY INPUT
2A	CAN HI
3A	SEAT 10
4A	SEAT 9
5A	SEAT 8
6A	SEAT 7
7A	BELT 7
8A	BELT 8
9A	BELT 9
10A	BELT 10
11A	CAN LO
12A	GROUND

J1B INPUTS 9-20

PIN	DESCRIPTION
1B	BELT 1
2B	BELT 2
3B	BELT 3
4B	BELT 4
5B	BELT 5
6B	BELT 6
7B	SEAT 6
8B	SEAT 5
9B	SEAT 4
10B	SEAT 3
11B	SEAT 2
12B	SEAT 1

TECHNICAL SPECIFICATIONS

Operating Voltage	7 to 32 VDC
Current Consumption	165mA
Operating Temperature	-40C TO +85C (-40F TO +185F)
Storage Temperature	-40C TO +85C (-40F TO +185F)
Ingress Protection	IP67 rated enclosure
Electrical Protection	Reverse voltage polarity protection on all connections. Internal thermal fuses. CAN Bus protected to 24V. ESD protected to J1113-13 specifications. Transient voltage protected to J1113-11 and J1113-42. Input circuits are protected from reverse polarity, over-current, over-voltage, and voltage transients.
Inputs	All inputs with selectable polarity
CAN Interface	Up to 2 SAE J1939 CAN 2.0B ports operating at 250kbps, J1939-11 or J1939-15 physical layer.
Dimensions	5.42" x 1.42" x 4.68"

3051015 6-Seat / 6-Belt I/O Module

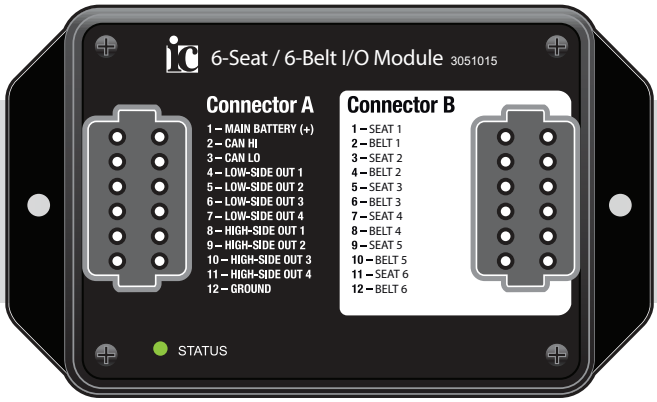

CONNECTOR A

Deutsch DTF15-12PA

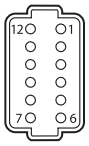

Terminal	Description
1	+12VDC (Batt) Power
2	CAN HI
3	CAN LO
4	CH1 OUT (-)
5	CH2 OUT (-)
6	CH3 OUT (-)
7	CH4 OUT (-)
8	CH5 OUT (+)
9	CH6 OUT (+)
10	CH7 OUT (+)
11	CH8 OUT (+)
12	GND

Mating connector is Deutsch DTP06-12SA with WP-2S wedgelock

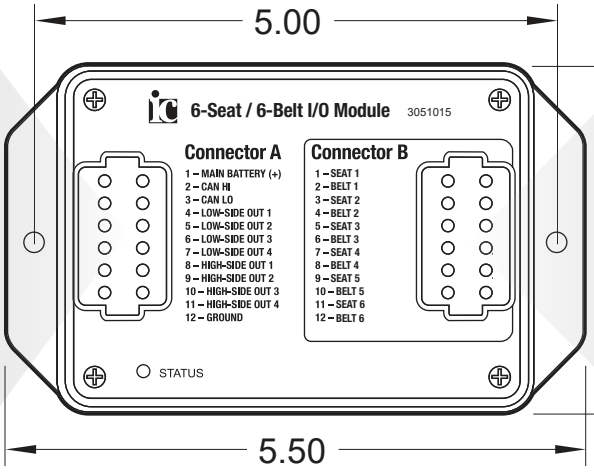

CONNECTOR B

Deutsch DTF15-12PB

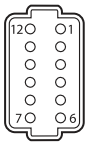

Terminal	Description
1	SEAT 1
2	BELT 1
3	SEAT 2
4	BELT 2
5	SEAT 3
6	BELT 3
7	SEAT 4
8	BELT 4
9	SEAT 5
10	BELT 5
11	SEAT 6
12	BELT 6

Mating connector is Deutsch DTP06-12SB with WP-2S wedgelock

TECHNICAL SPECIFICATIONS

Operating Voltage	7.2 to 16VDC
Operating Temp. Range	-40°C to +85°C (-40°F to +185°F)
Storage Temp. Range	-40°C to +85°C (-40°F to +185°F)
Ingress Protection	IP67
Electrical Protection	Reverse voltage polarity protection on all connections Outputs are protected from reverse polarity, over-current, and voltage transients Power input is protected from reverse polarity, over-current, over-voltage, and voltage transients
Output Current Max	@°C: 0.7A max per channel (Active HIGH) 1.3A max per channel (Active LOW)
Dimensions	5.5” wide x 1.77” high x 3.36” deep
Weight	15 oz

3050493 Seat Belt Cab Display

TECHNICAL SPECIFICATIONS

Operating Voltage	7 to 32VDC
Current Consumption at 13.8 VDC	30mA with no seats occupied 245mA with all seats occupied
Alarm Output Current	700mA low side switch with overcurrent protection
Operating Temperature Range	-40°C to +105°C (-40°F to +220°F)
Storage Temperature Range	-40°C to +105°C (-40°F to +220°F)
Ingress Protection	IP65
Electrical Protection	Reverse voltage polarity protection on all connections ESD protected to J1113-13 specifications Transient voltage protected to J1113-11 and J1113-42 Alarm output and power input are protected from reverse polarity, over-current, over-voltage, and voltage transients
CAN BUS Communication	SAE J1939 250K
Dimensions	3.50" x 2.12"
Weight	0.15 pounds (68 grams)

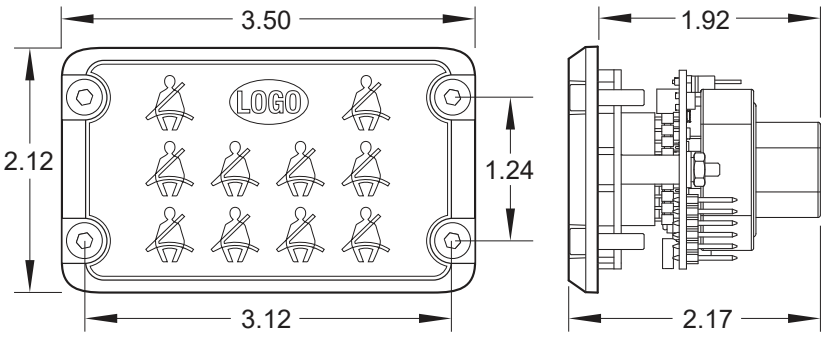

Mating connector is Deutsch DTP06-6S with WP-6S wedgelock and 0462-201-16141 sockets

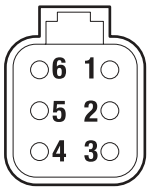

Deutsch DTP15-6P Connector	
Pin	Description
1	+12VDC Power
2	Vehicle System Ground
3	Alarm Output (High Side)
4	J1939 CAN Bus High
5	J1939 CAN Bus Low
6	J1939 CAN Shield

DISPLAY OPTIONS

Model	Description	Part Number
10 Seat Belt Display	10 Seat 2 front x 4 mid x 4 rear	3050493-01
8 Seat Display	2 front x 2 mid x 4 rear	3050493-02
12 Seat Display*	2 front x 5 mid x 5 rear	3050493-03
10 Seat Display	2 front x 3 mid x 5 rear	3050493-04
6 Seat Display	2 front x 4 rear	3050493-05
4 Seat Display	2 front x 2 rear	3050493-06
2 Seat Display	2 front	3050493-07
6 Seat Display	2 front x 2 mid x 2 rear	3050493-08



3050493-01



3050493-02



3050493-03



3050493-04



3050493-05



3050493-06



3050493-07



3050493-08

WIRING DIAGRAM (10-SEAT VERSION)

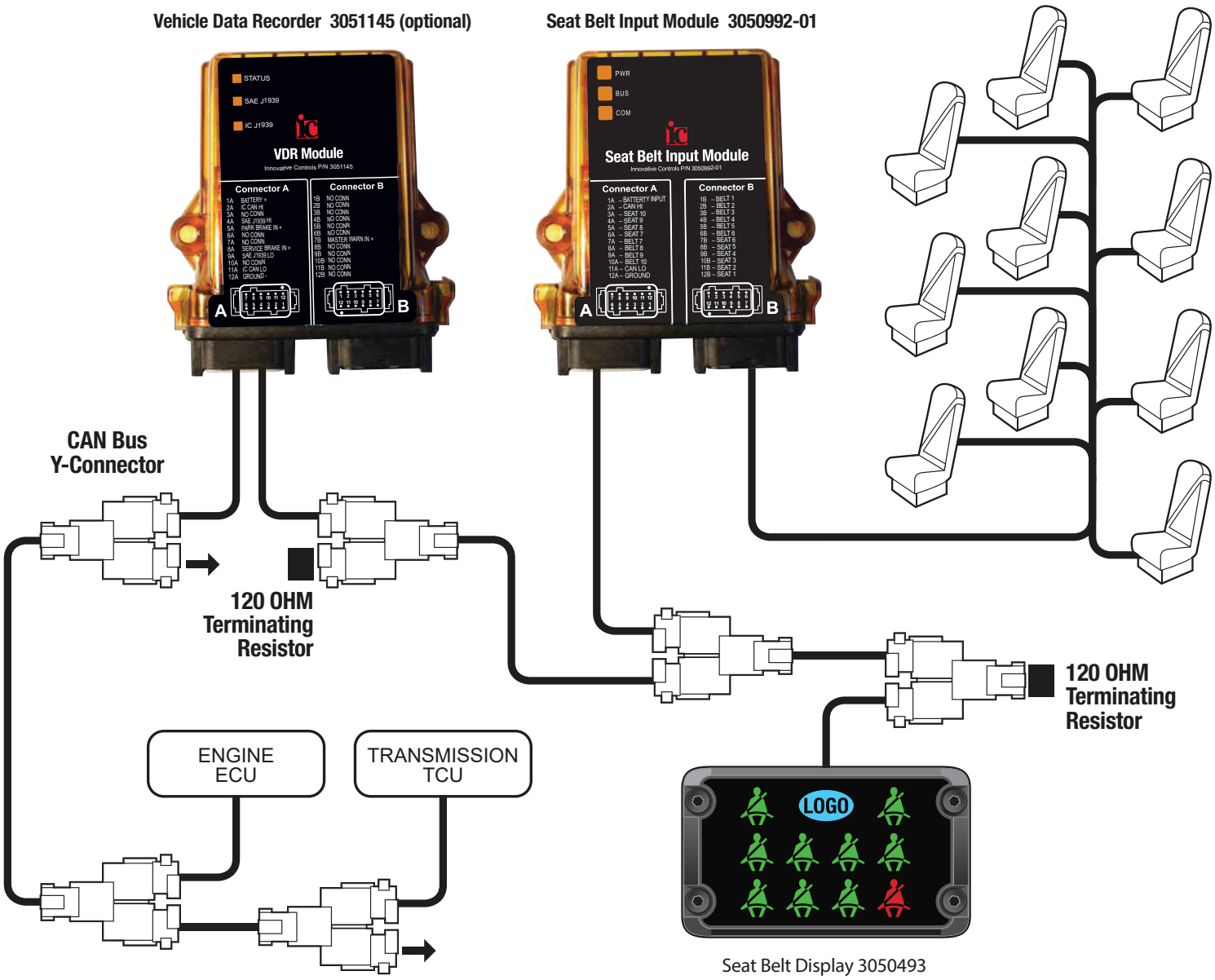

Seat Belt Display 3050493

SYSTEM COMPONENT OPTIONS

Model	Description	Part Number
Seat Belt Input Module	Capable of 10 Seats and 10 Belts	3050992-01
10 Seat Belt Display	10 Seat 2 front x 4 mid x 4 rear	3050493-01
8 Seat Display	2 front x 2 mid x 4 rear	3050493-02
12 Seat Display*	2 front x 5 mid x 5 rear	3050493-03
10 Seat Display	2 front x 3 mid x 5 rear	3050493-04
6 Seat Display	2 front x 4 rear	3050493-05
4 Seat Display	2 front x 2 rear	3050493-06
2 Seat Display	2 front	3050493-07
Vehicle Data Recorder	NFPA-1901 compliant data recorder	3051145

XX is Customer ID #, YY is Variant (for unique wiring)

ACCESSORIES

Description	Part Number
CAN Bus Cable – ECU to Network	4000652-nn (1)
CAN Bus Cable – Network Jumper	4000653-nn (1)
CAN Bus Y-Connector	4008119
CAN Bus Terminator	4008120

(1) nn is length in feet

WIRING DIAGRAM (6-SEAT VERSION)

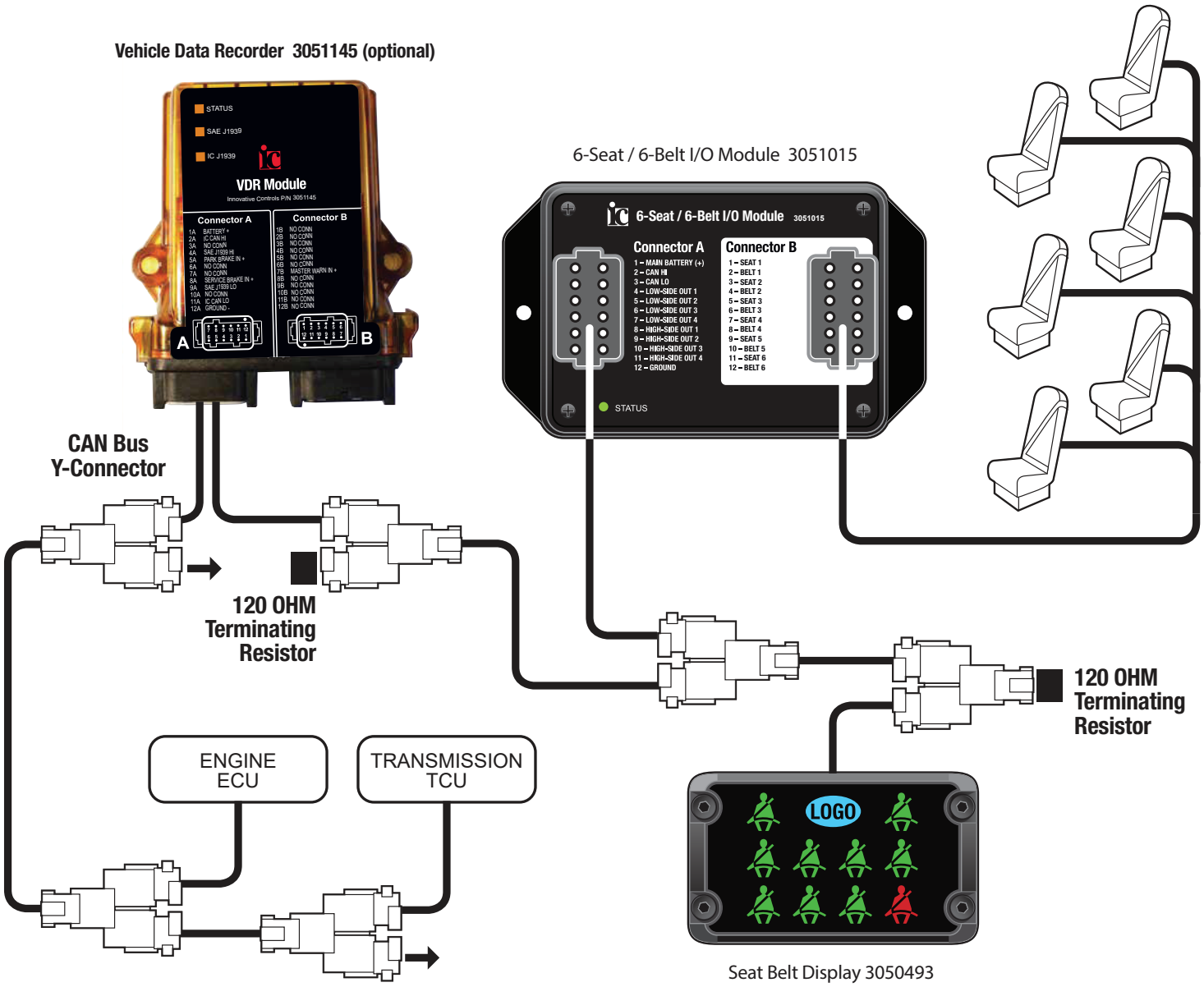

SYSTEM COMPONENT OPTIONS

Model	Description	Part Number
6-Seat / 6-Belt Input Module	Capable of 6 Seats and 6 Belts	3051015
10 Seat Belt Display	10 Seat 2 front x 4 mid x 4 rear	3050493-01
8 Seat Display	2 front x 2 mid x 4 rear	3050493-02
12 Seat Display*	2 front x 5 mid x 5 rear	3050493-03
10 Seat Display	2 front x 3 mid x 5 rear	3050493-04
6 Seat Display	2 front x 4 rear	3050493-05
4 Seat Display	2 front x 2 rear	3050493-06
2 Seat Display	2 front	3050493-07
Vehicle Data Recorder	NFPA-1901 compliant data recorder	3051145

XX is Customer ID #, YY is Variant (for unique wiring)

ACCESSORIES

Description	Part Number
CAN Bus Cable – ECU to Network	4000652-nn (1)
CAN Bus Cable – Network Jumper	4000653-nn (1)
CAN Bus Y-Connector	4008119
CAN Bus Terminator	4008120

(1) nn is length in feet